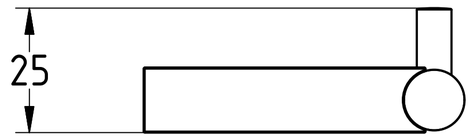

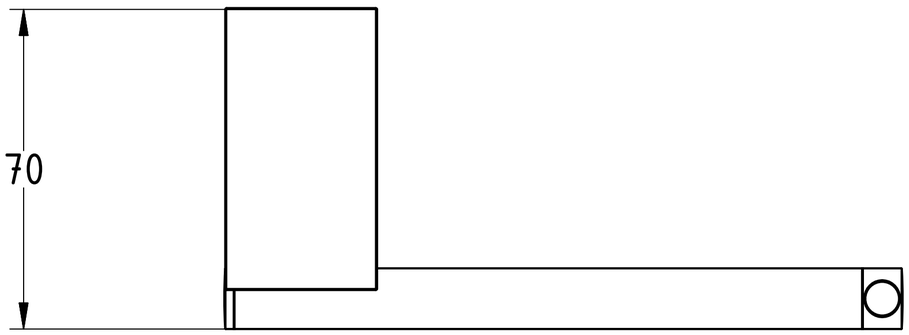

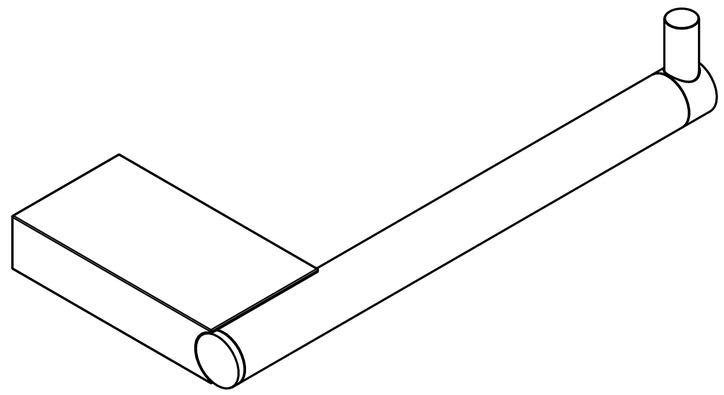

VIOLEK						
					Date	Name
				Drawn		
				Checked		
				Standard		
				Weight: 0,204 kg		
State	Changes	Date	Name			

GLAMOUR
TOILET ROLL HOLDER

1
A2