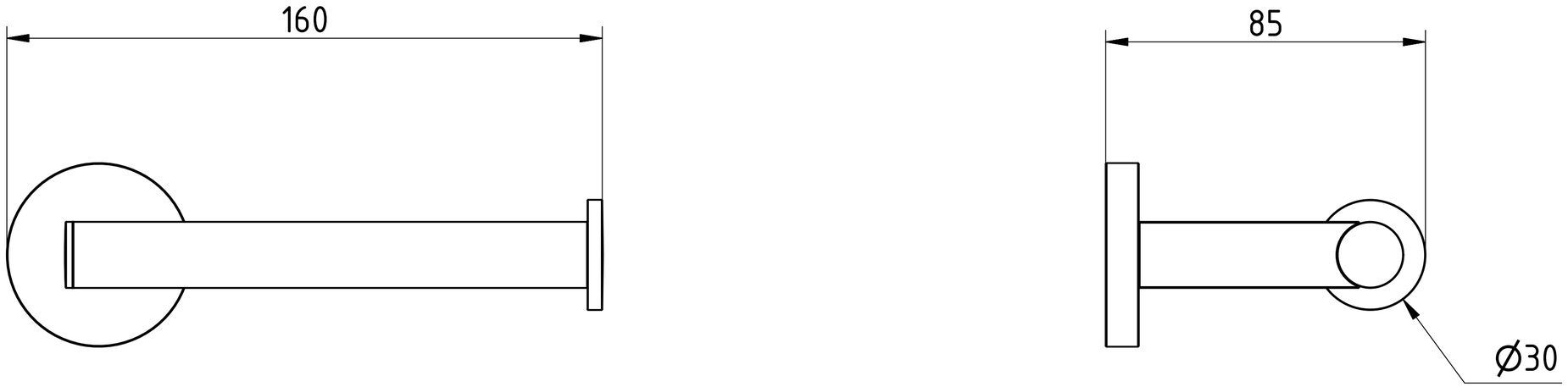

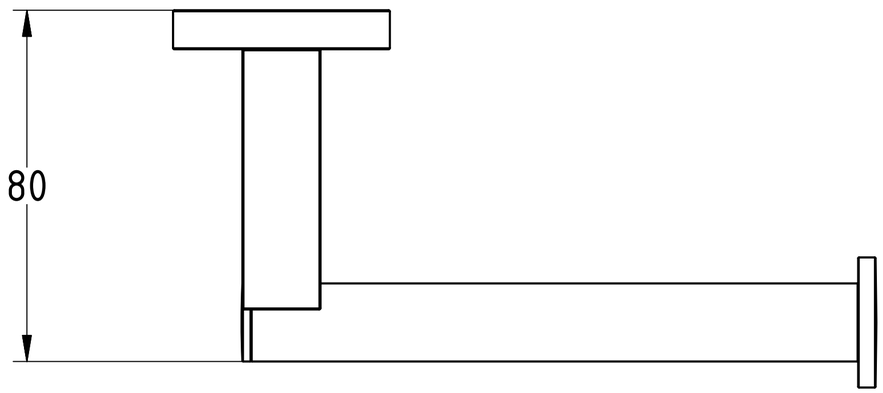

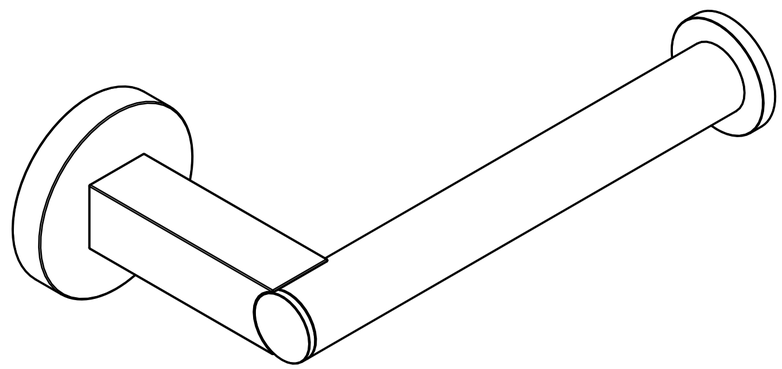

VIOLEK						
					Date	Name
				Drawn		
				Checked		
				Standard		
				Weight: N/A		
State	Changes	Date	Name			

SCANDAL
TOILET ROLL HOLDER

1
A2